Lydia 100.5 Basin

Product order code	LYDIA-100-B-??

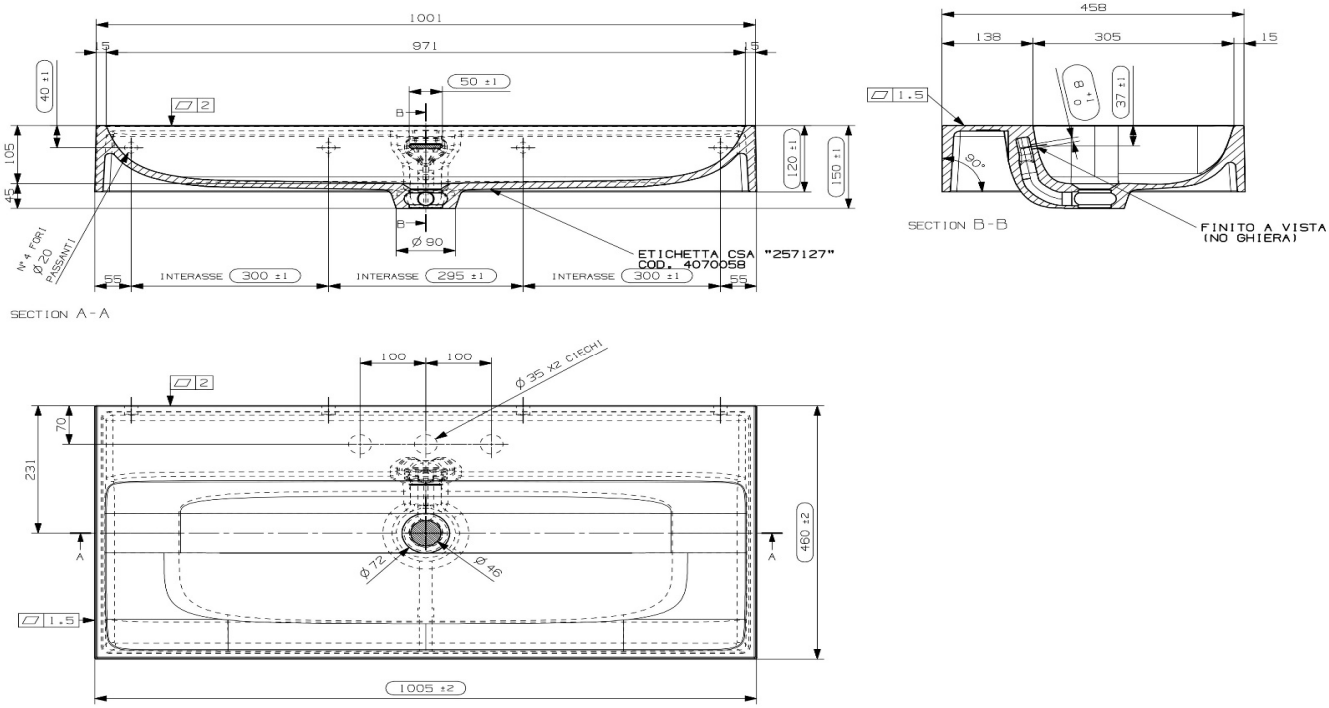

NOTE: To convert mm sizes to inches divide by 25.4

711-8 Koehler ave | Ronkonkoma, NY 11779 TEL 1-800-351-0038 | FAX 631-285-3342

WWW.HASTINGSTILEBATH.COM